80x80x25.5mm/3x1inch, 25~15 CFM

TA8025

General specifications

-Motor: Shaded pole,inner rotor,single phase, impedance protected design
-Motor Protection:
-Frame: Aluminum die-cast, black color cosmetics
-Impeller: Plastic, rated UL94V-0
-Bearing: Two ball bearings. (Sleeve bearing on request only)
-Rotation: CCW view from label side
-Operating Temp: Ball bearing ambient -20C~+80C, for sleeve -10~+45C
-Storage Temp:
-Life Expectancy: MTBF life test for ball bearing 80,000 hours at 45C, 50,000 hours at 60C
-Dielectric Strength: Over 1 min. at 1,500 VAC, 0.5mA, 50/60 Hz
-Insulation Resistance: Over 100 Mega Ohm at DC 500V
-IP Protection:
-Connection: Choice of connecting Wire leads (W type) or Terminal flat pin (T type)
-Weight: 260 g (0.57 Lbs)

Model No.	Rated Voltage	Voltage Range	Freq.	Input Power	Rated Current	Ref. Speed	Max. Airflow	Max.Static Pressure	Noise
	VAC	VAC	Hz	Watt	Amp	RPM	CFM	Inch/H2O	dB(A)
TA8025-H-110	115	100~120	50/60	11/9	0.14/0.12	2500/3000	22/25	0.18/0.21	28
TA8025-M-110	115	100~120	50/60	8/6	0.08/0.07	2100/2300	18/20	0.14/0.15	24
TA8025-L-110	115	100~120	50/60	6/4	0.057/0.054	1800/1900	15/16	0.11 /0.12	19
TA8025-H-220	230	200~240	50/60	11/9	0.075/0.065	2500/3000	22/25	0.18/0.21	28
TA8025-M-220	230	200~240	50/60	8/6	0.045/0.04	2100/2300	18/20	0.14/0.15	24
TA8025-L-220	230	200~240	50/60	6/4	0.037/0.033	1900/2100	15/17	0.11 /0.12	19
TA8025-H-110/220 dual voltage	115 230	100~120 200~240	50/60	11/9	0.14/0.12 0.75/0.65	2500/3000	22/25	0.18/0.21	28
TA8025-L-110/220 dual voltage	115 230	100~120 200~240	50/60	6/4	0.068/0.063 0.034/0.029	1900/2100	15/17	0.11/0.12	19

Related Product Information

Please see our related items below for suggested products to use with this item:

- Metal Fan Guard: TWG-80
- Plastic Fan Guard: TPG-80
- Plastic Fan Filter: TFK-80-30, TFK-80-45
- Metal Fan Screen: TMS-80

Related Technical Information

-Optional Function Leads:

- Tachometer,speed sensor pulses 5V, input 4.5~27 VDC,1 signal each revolution, or 2 signals each revolution available on request. Function-T
- AC Alarm Fan, DC Power supply alarm output, open collector or TTL available. Function-L Alarm DC input
- Fan abnormal speed alarm, Programmable CPU AC Power alarm output,open collector or TTL available on request. Function-V Programmable CPU Alarm
- AC Fan Dual Voltage Wiring Diagram : AC Fan Dual Voltage 115VAC/230VAC

Fan Performance Curves and Dimensions

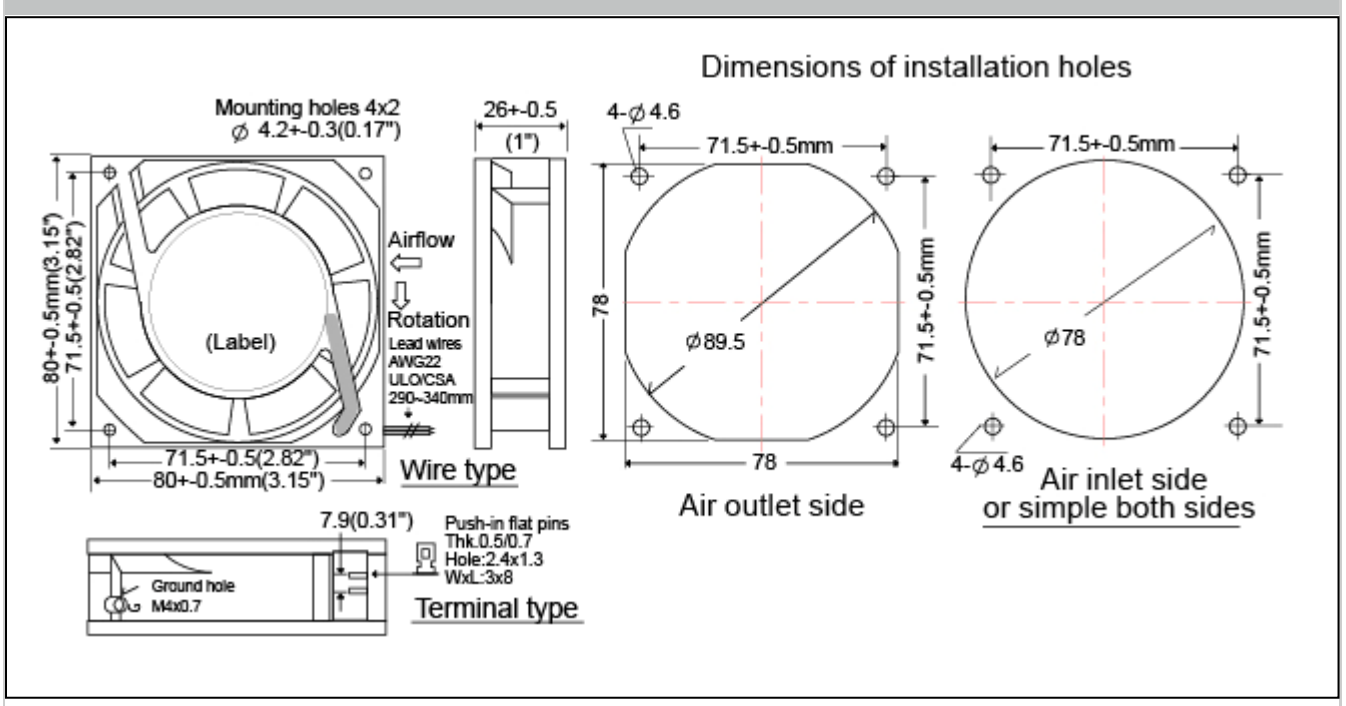

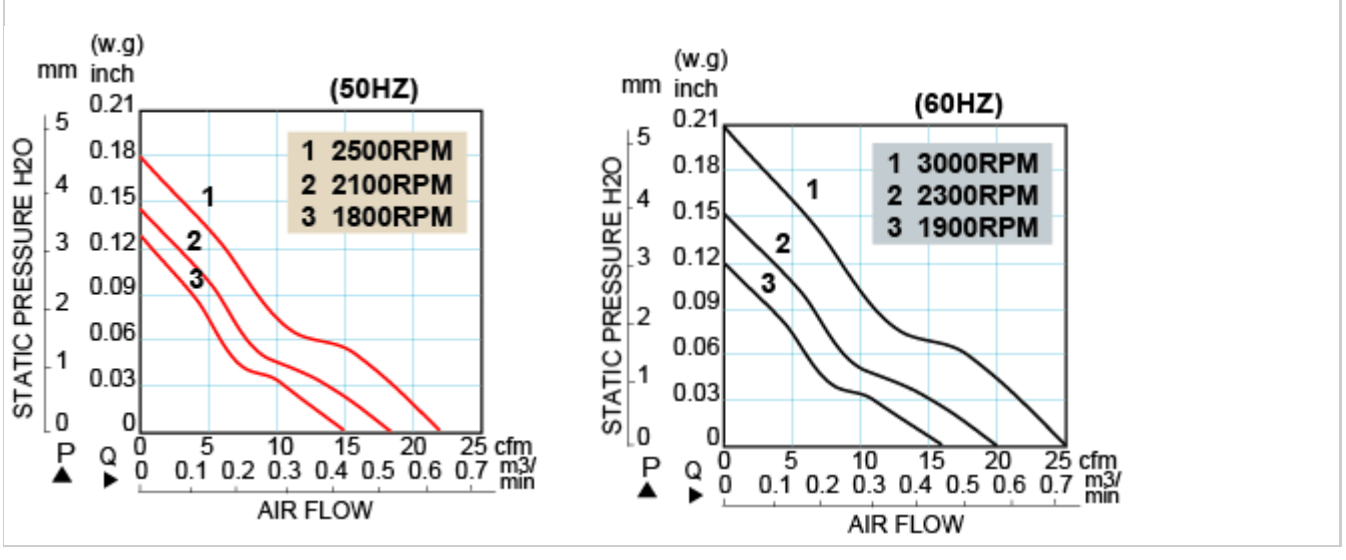

* TEI reserves the right to change data and specs without notice* Tests are at nominal rated voltage against zero static pressure*Specifications subject to change without notice, data tolerance +-10%

TEI, Inc. 3540 W. Sahara Ave., Las Vegas, NV 89102
Tel: 702-220-7400; Fax: 775-628-8932; Email:sales@teifans.com